TFT LCD Approval Specification

MODEL NO.: M270H1- L01

Customer: Common

Approved by:

Note:

核准時間	部門	審核	角色	投票
2010-01-21 17:45:22	MTR 產品管理處	吳 2010.01.21 柏 勳	Director	Accept

- CONTENTS -

REVISION HISTORY 3

1. GENERAL DESCRIPTION 4
   1.1 OVERVIEW
   1.2 FEATURES
   1.3 APPLICATION
   1.4 GENERAL SPECIFICATIONS
   1.5 MECHANICAL SPECIFICATIONS

2. ABSOLUTE MAXIMUM RATINGS 5
   2.1 ABSOLUTE RATINGS OF ENVIRONMENT
   2.2 ELECTRICAL ABSOLUTE RATINGS
      2.2.1 TFT LCD MODULE
      2.2.2 BACKLIGHT UNIT

3. ELECTRICAL CHARACTERISTICS 7
   3. 1 TFT LCD MODULE
      3.1.1 Vcc Power Dip Condition
   3.2 BACKLIGHT UNIT

4. BLOCK DIAGRAM 11
   4.1 TFT LCD MODULE
   4.2 BACKLIGHT UNIT

5. INPUT TERMINAL PIN ASSIGNMENT 12
   5.1 TFT LCD MODULE
   5.2 LVDS DATA MAPPING TABLE
   5.3 BACKLIGHT UNIT
   5.4 COLOR DATA INPUT ASSIGNMENT

6. INTERFACE TIMING 15
   6.1 INPUT SIGNAL TIMING SPECIFICATIONS
   6.2 POWER ON/OFF SEQUENCE

7. OPTICAL CHARACTERISTICS 17
   7.1 TEST CONDITIONS
   7.2 OPTICAL SPECIFICATIONS

8. PACKAGING 21
   8.1 PACKING SPECIFICATIONS
   8.2 PACKING METHOD

9. DEFINITION OF LABELS 23

10. PRECAUTIONS 24
   10.1 ASSEMBLY AND HANDLING PRECAUTIONS
   10.2 SAFETY PRECAUTIONS
   10.3 SAFETY STANDARDS
   10.4 OTHER

11. PRECAUTIONS ---------- 24
   11.1 ASSEMBLY AND HANDLING PRECAUTIONS
   11.2 SAFETY PRECAUTIONS
   11.3 SAFETY STANDARDS
   11.4 STORAGE
   11.5 OPERATION CONDITION GUIDE
   11.6 OTHER

12. MECHANICAL CHARACTERISTICS ---------- 25

REVISION HISTORY

Version	Date	Section	Description
Ver 3.0	11,Jan., 10’ ’	-	M270H1-L01 Approval specifications was first issued.

1. GENERAL DESCRIPTION

1.1 OVERVIEW

M270H1-L01 is a 27.0" TFT Liquid Crystal Display module with 4 CCFL Backlight unit and 30 pins 2ch-LVDS interface. This module supports 1920 x 1080 Full HD mode and can display up to 16.7M colors. The inverter module for Backlight is not built in.

1.2 FEATURES

- Extra-wide viewing angle.
- High contrast ratio.
- Fast response time.
- Full HD (1920 x 1080 pixels) resolution.
- DE (Data Enable) only mode.
- LVDS (Low Voltage Differential Signaling) interface.
- RoHS compliance.

1.3 APPLICATION

- TFT LCD Monitor

1.4 GENERAL SPECIFICATI0NS

Item	Specification	Unit	Note
Active Area	597.89 (H) X 336.31 (V), (27.0 inch Diagonal)	mm	(1)
Bezel Opening Area	603.9 (W) x 342.3 (H)	mm	
Driver Element	a-Si TFT active matrix	-	-
Pixel Number	1920 x R.G.B. x 1080	pixel	-
Pixel Pitch	0.3114 (H) x 0.3114 (V)	mm	-
Pixel Arrangement	RGB vertical stripe	-	-
Display Colors	16.7M	color	-
Transmissive Mode	Normally White	-	-
Surface Treatment	AG type, 3H hard coating, Haze 25	-	-
Module Power Consumption	37.1	Watt	(2)

1.5 MECHANICAL SPECIFICATIONS

Item		Min.	Typ.	Max.	Unit	Note
Module Size	Horizontal(H)	629.5	630.0	630.5	mm	(1)
	Vertical(V)	367.8	368.2	368.7	mm	
	Depth(D)	17.0	17.5	18.0	mm	
Weight		-	3750	3800	g	-

Note (1) Please refer to the attached drawings for more information of front and back outline dimensions.

Note (2) Please refer to sec.3.1 & 3.2 for more information of power consumption.

2. ABSOLUTE MAXIMUM RATINGS

2.1 ABSOLUTE RATINGS OF ENVIRONMENT

Item	Symbol	Value		Unit	Note
		Min.	Max.		
Storage Temperature	T_{ST}	-20	60	ºC	(1)
Operating Ambient Temperature	T_{OP}	0	50	ºC	(1), (2)
Shock (Non-Operating)	S_{NOP}	-	50	G	(3), (5)
Vibration (Non-Operating)	V_{NOP}	-	1.5	G	(4), (5)

Note (1) Temperature and relative humidity range is shown in the figure below.

(a) 90 %RH Max. (Ta ≦ 40 ºC).

(b) Wet-bulb temperature should be 39 ºC Max. (Ta > 40 ºC).

(c) No condensation.

Note (2) The temperature of panel display surface area should be 0 ºC Min. and 60 ºC Max.

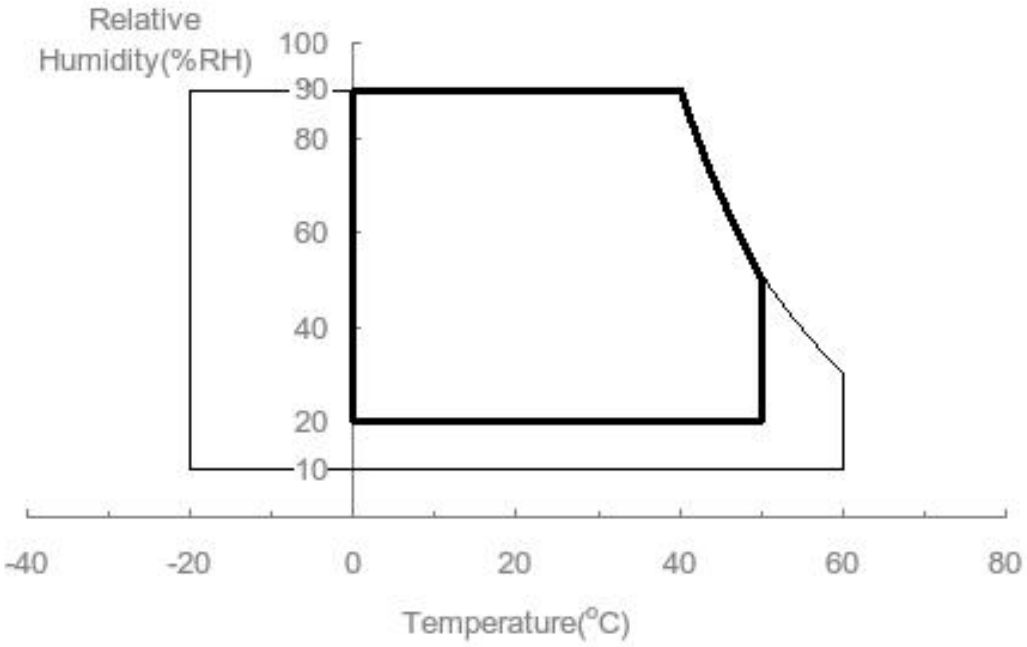

Note (3) 11ms, half sine wave, 1 time for ± X, ± Y, ± Z.

Note (4) 10 ~ 300 Hz, 10min/cycle, 3 cycles each X, Y, Z.

Note (5) At testing Vibration and Shock, the fixture in holding the module has to be hard and rigid enough so that the module would not be twisted or bent by the fixture.

The fixing condition is shown as below:

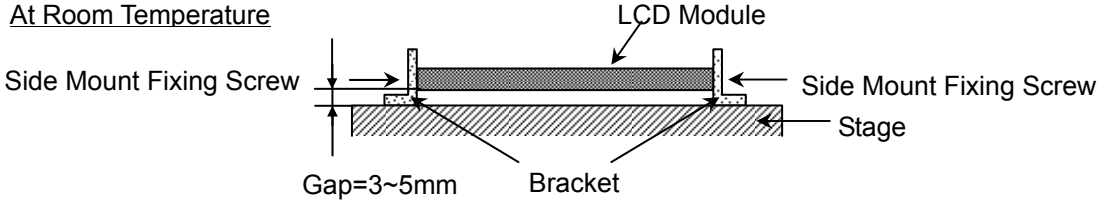

2.2 ELECTRICAL ABSOLUTE RATINGS

2.2.1 TFT LCD MODULE

Item	Symbol	Value		Unit	Note
		Min.	Max.		
Power Supply Voltage	Vcc	-0.3	+6.0	V	(1)
Logic Input Voltage	Vlogic	-0.3	+3.6	V	

2.2.2 BACKLIGHT UNIT

Item	Symbol	Value		Unit	Note
		Min.	Max.		
Lamp Voltage	V_L	-	2.5K	V_{RMS}	(1), (2)
Lamp Current	I_L	3.0	8.0	mA_{RMS}	(1), (2)
Lamp Frequency	F_L	40	80	KHz	

Note (1) Permanent damage to the device may occur if maximum values are exceeded. Function operation should be restricted to the conditions described under Normal Operating Conditions.

Note (2) Specified values are for lamp (Refer to 3.2 for further information).

3. ELECTRICAL CHARACTERISTICS

3.1 TFT LCD MODULE

Ta = 25 ± 2 ºC

Parameter		Symbol	Value			Unit	Note
			Min.	Typ.	Max.		
Power Supply Voltage		Vcc	4.5	5.0	5.5	V	-
Ripple Voltage		V_{RP}			300	mV	-
Power on Rush Current		I_{RUSH}			3	A	(2)
Power Supply Current	White			0.65	0.78	A	(3)a
	Black			1.22	1.464	A	(3)b
	Vertical Stripe			1.02	1.22	A	(3)c
Power Consumption		PLCD		6.1	7.32	Watt	(4)
LVDS differential input voltage		Vid	100		600	mV	
LVDS common input voltage		Vic		1.2		V	
Logic High Input Voltage		VIH	2.64		3.6	V	
Logic Low Input Voltage		VIL	-0.3		0.66	V	

Note (1) The module should be always operated within above ranges.

Note (2) Power on rush current measurement conditions:

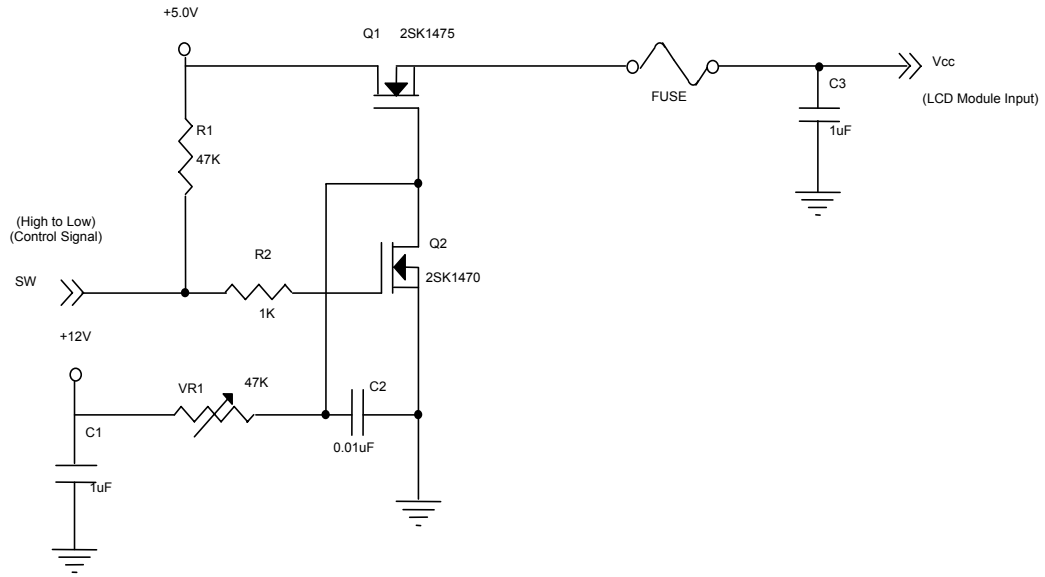

Vcc rising time is 470µs

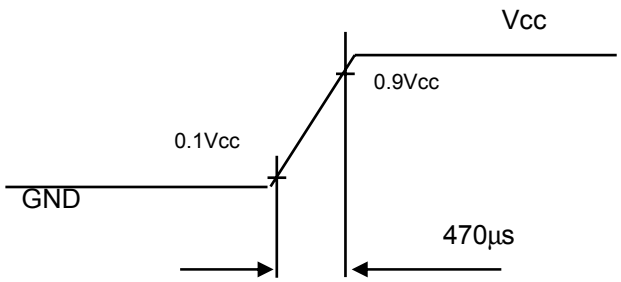

Note (3) The specified power supply current is under the conditions at Vcc = 5.0 V, Ta = 25 ± 2 ºC, f_v = 75 Hz, whereas a power dissipation check pattern below is displayed.

a. White Pattern



Active Area

b. Black Pattern



Active Area

c. Vertical Stripe Pattern

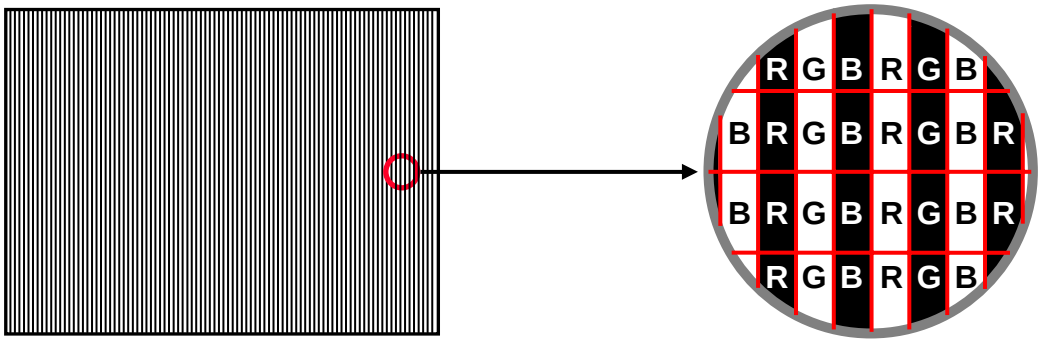

Active Area

Note (4)The power consumption is specified at the pattern with the maximum current.

3.1.1 Vcc Power Dip Condition:

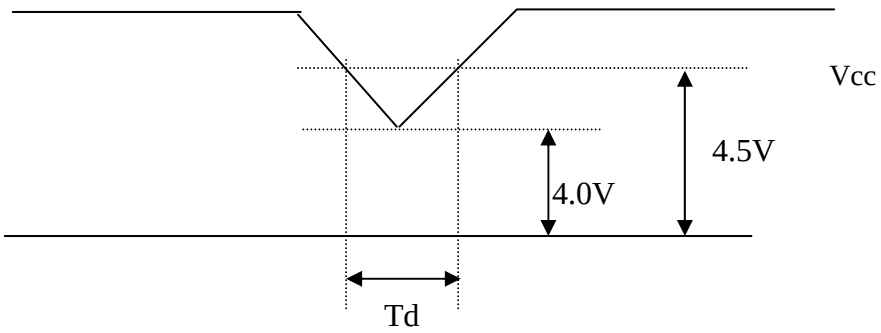

Dip condition: $4.0V \le Vcc \le 4.5V, Td \le 20ms$

3.2 BACKLIGHT UNIT

Ta = 25 ± 2 ºC

Parameter	Symbol	Value			Unit	Note
		Min.	Typ.	Max.		
Lamp Input Voltage	V_L	927	1030	1133	VRMS	IL = 7.5 mA
Lamp Current	I_L	3.0	7.5	8.0	mARMS	(1)
Lamp Turn On Voltage	V_S	---	---	1580(25℃)	VRMS	(2)
		---	---	1900 (0℃)	VRMS	(2)
Operating Frequency	F_L	40	---	80	KHz	(3)
Lamp Life Time	L_{BL}	50000	---	---	Hrs	(5)
Power Consumption	P_L	---	31.0	---	W	(4), IL = 7.5 mA

Note (1) Lamp current is measured by current amplify & oscilloscope as shown below:

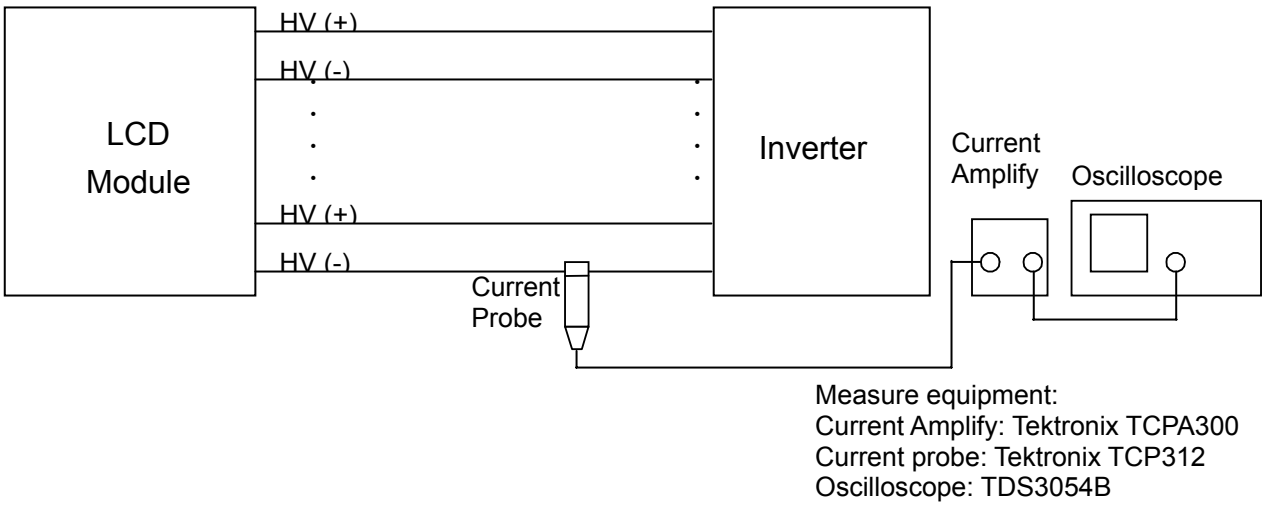

Measure equipment:
Current Amplify: Tektronix TCPA300
Current probe: Tektronix TCP312
Oscilloscope: TDS3054B

Note (2) The voltage that must be larger than Vs should be applied to the lamp for more than 1 second after startup. Otherwise, the lamp may not be turned on normally. It is the value output voltage of NF circuit.

Note (3) The lamp frequency may produce interference with horizontal synchronization frequency from the display, which might cause line flow on the display. In order to avoid interference, the lamp frequency should be detached from the horizontal synchronization frequency and its harmonics as far as possible.

Note (4) $P_L = I_L \times V_L \times 4$ (for 4lamps)

Note (5) The lifetime of lamp can be defined as the time in which it continues to operate under the condition Ta = 25 ±2 °C and I_L = 7.5 mArms until one of the following events occurs:

(a)When the brightness becomes or lower than 50% of its original value.

(b) Effective lighting length decreases 80% under for initial. (Effective lighting length is a scope of luminance 80% over for average luminance at several point in lamp center.)

Note (6) The waveform of the voltage output of inverter must be area-symmetric and the design of the inverter must have specifications for the modularized lamp. The performance of the Backlight, such as lifetime or brightness, is greatly influenced by the characteristics of the DC-AC inverter for

the lamp. All the parameters of an inverter should be carefully designed to avoid producing too much current leakage from high voltage output of the inverter. When designing or ordering the inverter please make sure that a poor lighting caused by the mismatch of the Backlight and the inverter (miss-lighting, flicker, etc.) never occurs. If the above situation is confirmed, the module should be operated in the same manners when it is installed in your instrument.

The output of the inverter must have symmetrical (negative and positive) voltage waveform and symmetrical current waveform.(Unsymmetrical ratio is less than 10%) Please do not use the inverter which has unsymmetrical voltage and unsymmetrical current and spike wave. Lamp frequency may produce interface with horizontal synchronous frequency and as a result this may cause beat on the display. Therefore lamp frequency shall be as away possible from the horizontal synchronous frequency and from its harmonics in order to prevent interference.

Requirements for a system inverter design, which is intended to have a better display performance, a better power efficiency and a more reliable lamp. It shall help increase the lamp lifetime and reduce its leakage current.

a. The asymmetry rate of the inverter waveform should be 10% below;

b. The distortion rate of the waveform should be within $\sqrt{2} \pm 10\%$;

c. The ideal sine wave form shall be symmetric in positive and negative polarities

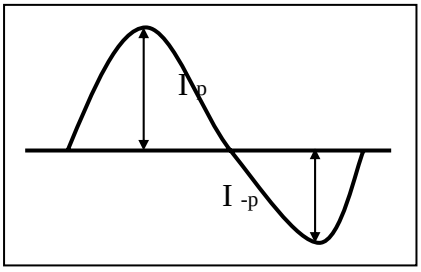

* Asymmetry rate:

$$| I_p - I_{-p} | / I_{rms} * 100\%$$

* Distortion rate

$$I_p \text{ (or } I_{-p}) / I_{rms}$$

Note (7) 50~60KHz, the frequency range can guarantee the optical and electrical characteristics; 40~80KHz the frequency range will not effect the Lifetime and reliability characteristics.

4. BLOCK DIAGRAM

4.1 TFT LCD MODULE

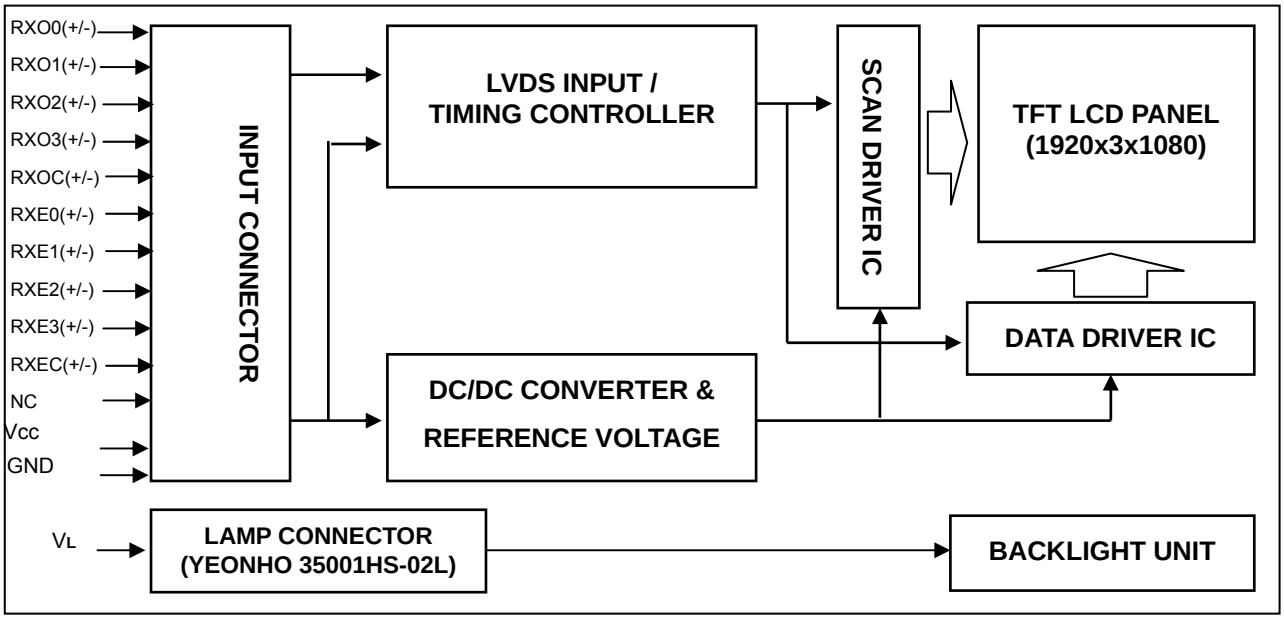

4.2 BACKLIGHT UNIT

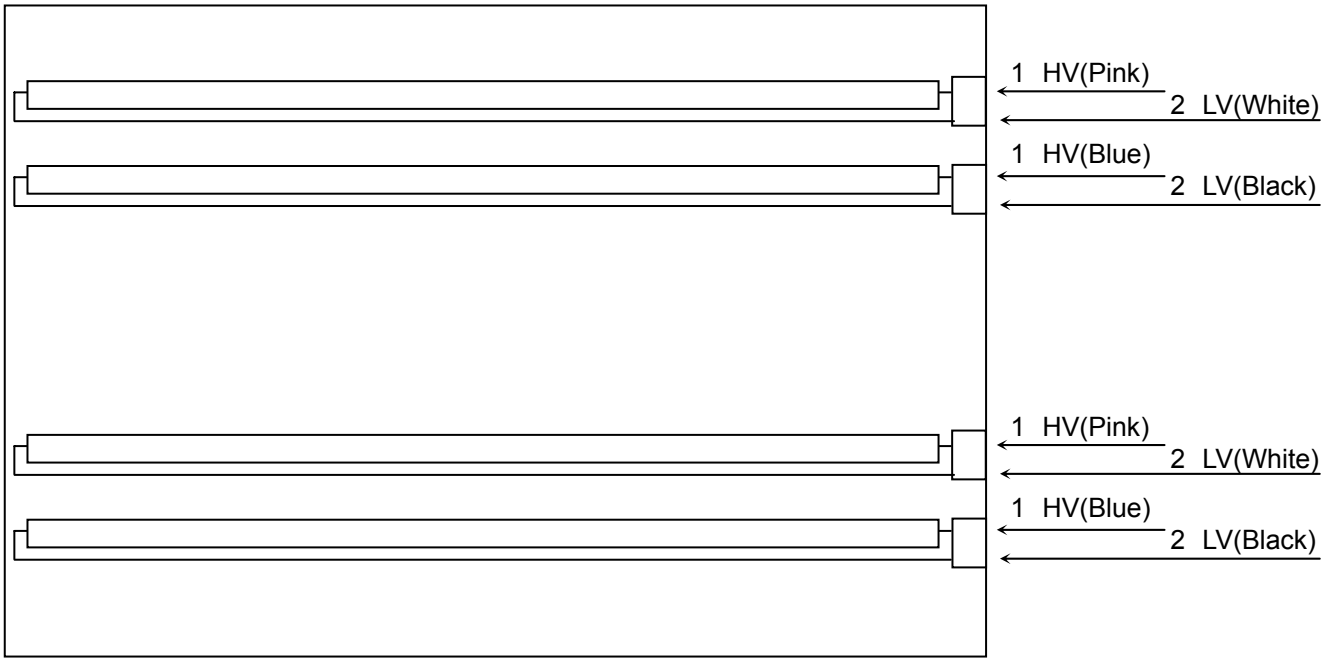

Note: On the same side, the same polarity lamp voltage design for lamps is recommended.

5. INPUT TERMINAL PIN ASSIGNMENT

5.1 TFT LCD MODULE

Pin	Name	Description
1	RXO0-	Negative LVDS differential data input. Channel O0 (odd)
2	RXO0+	Positive LVDS differential data input. Channel O0 (odd)
3	RXO1-	Negative LVDS differential data input. Channel O1 (odd)
4	RXO1+	Positive LVDS differential data input. Channel O1 (odd)
5	RXO2-	Negative LVDS differential data input. Channel O2 (odd)
6	RXO2+	Positive LVDS differential data input. Channel O2 (odd)
7	GND	Ground
8	RXOC-	Negative LVDS differential clock input. (odd)
9	RXOC+	Positive LVDS differential clock input. (odd)
10	RXO3-	Negative LVDS differential data input. Channel O3(odd)
11	RXO3+	Positive LVDS differential data input. Channel O3 (odd)
12	RXE0-	Negative LVDS differential data input. Channel E0 (even)
13	RXE0+	Positive LVDS differential data input. Channel E0 (even)
14	GND	Ground
15	RXE1-	Negative LVDS differential data input. Channel E1 (even)
16	RXE1+	Positive LVDS differential data input. Channel E1 (even)
17	GND	Ground
18	RXE2-	Negative LVDS differential data input. Channel E2 (even)
19	RXE2+	Positive LVDS differential data input. Channel E2 (even)
20	RXEC-	Negative LVDS differential clock input. (even)
21	RXEC+	Positive LVDS differential clock input. (even)
22	RXE3-	Negative LVDS differential data input. Channel E3 (even)
23	RXE3+	Positive LVDS differential data input. Channel E3 (even)
24	GND	Ground
25	NC	For LCD internal use only, Do not connect
26	NC	For LCD internal use only, Do not connect
27	VCC	+5.0V power supply
28	VCC	+5.0V power supply
29	VCC	+5.0V power supply
30	VCC	+5.0V power supply

Note (1) Connector Part No.: 093G30-B0001A(STARCONN) or MSAKT2407P30HA (STM)or FI-X30SSLH-HF(JAE)

Note (2) Mating Wire Cable Connector Part No.: FI-X30H(JAE) or FI-X30HL(JAE)

Note (3) The first pixel is odd.

Note (4) Input signal of even and odd clock should be the same timing.

5.2 LVDS DATA MAPPING TABLE

LVDS Channel O0	LVDS output	D7	D6	D4	D3	D2	D1	D0
	Data order	OG0	OR5	OR4	OR3	OR2	OR1	OR0
LVDS Channel O1	LVDS output	D18	D15	D14	D13	D12	D9	D8
	Data order	OB1	OB0	OG5	OG4	OG3	OG2	OG1
LVDS Channel O2	LVDS output	D26	D25	D24	D22	D21	D20	D19
	Data order	DE	NA	NA	OB5	OB4	OB3	OB2
LVDS Channel O3	LVDS output	D23	D17	D16	D11	D10	D5	D27
	Data order	NA	OB7	OB6	OG7	OG6	OR7	OR6
LVDS Channel E0	LVDS output	D7	D6	D4	D3	D2	D1	D0
	Data order	EG0	ER5	ER4	ER3	ER2	ER1	ER0
LVDS Channel E1	LVDS output	D18	D15	D14	D13	D12	D9	D8
	Data order	EB1	EB0	EG5	EG4	EG3	EG2	EG1
LVDS Channel E2	LVDS output	D26	D25	D24	D22	D21	D20	D19
	Data order	DE	NA	NA	EB5	EB4	EB3	EB2
LVDS Channel E3	LVDS output	D23	D17	D16	D11	D10	D5	D27
	Data order	NA	EB7	EB6	EG7	EG6	ER7	ER6

5.3 BACKLIGHT UNIT:

Pin	Symbol	Description	Remark
1-1	HV	High Voltage	Pink
1-2	LV	Low Voltage	White
2-3	HV	High Voltage	Blue
2-4	LV	Low Voltage	Black

Note (1) Connector Part No.: YEONHO 35001HS-02L or equivalent

5.4 COLOR DATA INPUT ASSIGNMENT

The brightness of each primary color (red, green and blue) is based on the 8-bit gray scale data input for the color. The higher the binary input, the brighter the color. The table below provides the assignment of color versus data input.

Color		Data Signal																							
		Red								Green								Blue							
		R7	R6	R5	R4	R3	R2	R1	R0	G7	G6	G5	G4	G3	G2	G1	G0	B7	B6	B5	B4	B3	B2	B1	B0
Basic Colors	Black	0	0	0	0	0	0	0	0	0	0	0	0	0	0	0	0	0	0	0	0	0	0	0	0
	Red	1	1	1	1	1	1	1	1	0	0	0	0	0	0	0	0	0	0	0	0	0	0	0	0
	Green	0	0	0	0	0	0	0	0	1	1	1	1	1	1	1	1	0	0	0	0	0	0	0	0
	Blue	0	0	0	0	0	0	0	0	0	0	0	0	0	0	0	0	1	1	1	1	1	1	1	1
	Cyan	0	0	0	0	0	0	0	0	1	1	1	1	1	1	1	1	1	1	1	1	1	1	1	1
	Magenta	1	1	1	1	1	1	1	1	0	0	0	0	0	0	0	0	1	1	1	1	1	1	1	1
	Yellow	1	1	1	1	1	1	1	1	1	1	1	1	1	1	1	1	0	0	0	0	0	0	0	0
	White	1	1	1	1	1	1	1	1	1	1	1	1	1	1	1	1	1	1	1	1	1	1	1	1
Gray Scale Of Red	Red(0) / Dark	0	0	0	0	0	0	0	0	0	0	0	0	0	0	0	0	0	0	0	0	0	0	0	0
	Red(1)	0	0	0	0	0	0	0	1	0	0	0	0	0	0	0	0	0	0	0	0	0	0	0	0
	Red(2)	0	0	0	0	0	0	1	0	0	0	0	0	0	0	0	0	0	0	0	0	0	0	0	0
	:	:	:	:	:	:	:	:	:	:	:	:	:	:	:	:	:	:	:	:	:	:	:	:	:
	:	:	:	:	:	:	:	:	:	:	:	:	:	:	:	:	:	:	:	:	:	:	:	:	:
	Red(253)	1	1	1	1	1	1	0	1	0	0	0	0	0	0	0	0	0	0	0	0	0	0	0	0
	Red(254)	1	1	1	1	1	1	1	0	0	0	0	0	0	0	0	0	0	0	0	0	0	0	0	0
	Red(255)	1	1	1	1	1	1	1	1	0	0	0	0	0	0	0	0	0	0	0	0	0	0	0	0
Gray Scale Of Green	Green(0) / Dark	0	0	0	0	0	0	0	0	0	0	0	0	0	0	0	0	0	0	0	0	0	0	0	0
	Green(1)	0	0	0	0	0	0	0	0	0	0	0	0	0	0	0	1	0	0	0	0	0	0	0	0
	Green(2)	0	0	0	0	0	0	0	0	0	0	0	0	0	0	1	0	0	0	0	0	0	0	0	0
	:	:	:	:	:	:	:	:	:	:	:	:	:	:	:	:	:	:	:	:	:	:	:	:	:
	:	:	:	:	:	:	:	:	:	:	:	:	:	:	:	:	:	:	:	:	:	:	:	:	:
	Green(253)	0	0	0	0	0	0	0	0	1	1	1	1	1	1	0	1	0	0	0	0	0	0	0	0
	Green(254)	0	0	0	0	0	0	0	0	1	1	1	1	1	1	1	0	0	0	0	0	0	0	0	0
	Green(255)	0	0	0	0	0	0	0	0	1	1	1	1	1	1	1	1	0	0	0	0	0	0	0	0
Gray Scale Of Blue	Blue(0) / Dark	0	0	0	0	0	0	0	0	0	0	0	0	0	0	0	0	0	0	0	0	0	0	0	0
	Blue(1)	0	0	0	0	0	0	0	0	0	0	0	0	0	0	0	0	0	0	0	0	0	0	0	1
	Blue(2)	0	0	0	0	0	0	0	0	0	0	0	0	0	0	0	0	0	0	0	0	0	0	1	0
	:	:	:	:	:	:	:	:	:	:	:	:	:	:	:	:	:	:	:	:	:	:	:	:	:
	:	:	:	:	:	:	:	:	:	:	:	:	:	:	:	:	:	:	:	:	:	:	:	:	:
	Blue(253)	0	0	0	0	0	0	0	0	0	0	0	0	0	0	0	0	1	1	1	1	1	1	0	1
	Blue(254)	0	0	0	0	0	0	0	0	0	0	0	0	0	0	0	0	1	1	1	1	1	1	1	0
	Blue(255)	0	0	0	0	0	0	0	0	0	0	0	0	0	0	0	0	1	1	1	1	1	1	1	1

Note (1) 0: Low Level Voltage, 1: High Level Voltage

6. INTERFACE TIMING

6.1 INPUT SIGNAL TIMING SPECIFICATIONS

The input signal timing specifications are shown as the following table and timing diagram.

Signal	Item	Symbol	Min.	Typ.	Max.	Unit	Note
LVDS Clock	Frequency	Fc	54.54	74	98	MHz	-
	Period	Tc	-	13.5	-	ns	
	Input cycle to cycle jitter	T_{rcl}	-0.02*Tc	-	0.02*Tc	ns	(1)
	Spread spectrum modulation range	F_{clkin_mod}	0.98*Fc		1.02*Fc	MHz	(2)
	Spread spectrum modulation frequency	F_{SSM}			200	KHz	
	High Time	Tch	-	4/7	-	Tc	-
	Low Time	Tcl	-	3/7	-	Tc	-
LVDS Data	Setup Time	Tlvs	600	-	-	ps	-
	Hold Time	Tlvh	600	-	-	ps	-
Vertical Active Display Term	Frame Rate	Fr	47	60	75	Hz	Tv=Tvd+Tvb
	Total	Tv	1105	1125	1136	Th	-
	Display	Tvd	1080	1080	1080	Th	-
	Blank	Tvb	Tv-Tvd	45	Tv-Tvd	Th	-
Horizontal Active Display Term	Total	Th	1050	1100	1150	Tc	Th=Thd+Thb
	Display	Thd	960	960	960	Tc	-
	Blank	Thb	Th-Thd	140	Th-Thd	Tc	-

Note: Because this module is operated by DE only mode, Hsync and Vsync input signals should be set to low logic level or ground. Otherwise, this module would operate abnormally.

INPUT SIGNAL TIMING DIAGRAM

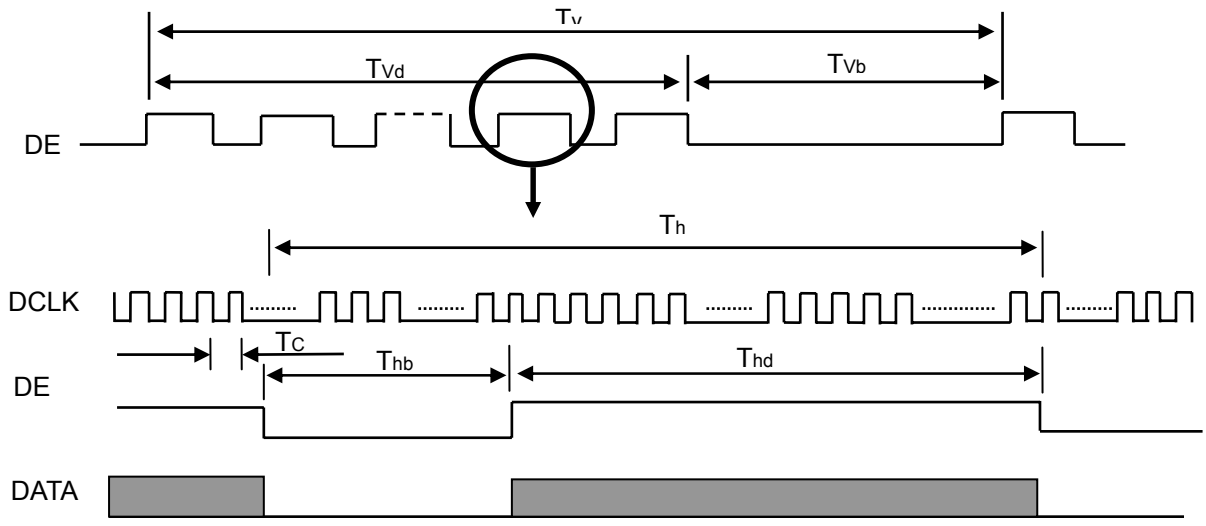

Note (1) The input clock cycle-to-cycle jitter is defined as below figures. Trcl = I T_1 – TI

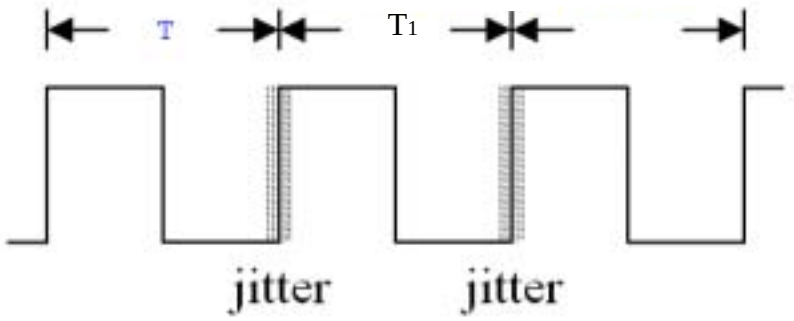

Note (2) The SSCG (Spread spectrum clock generator) is defined as below figures.

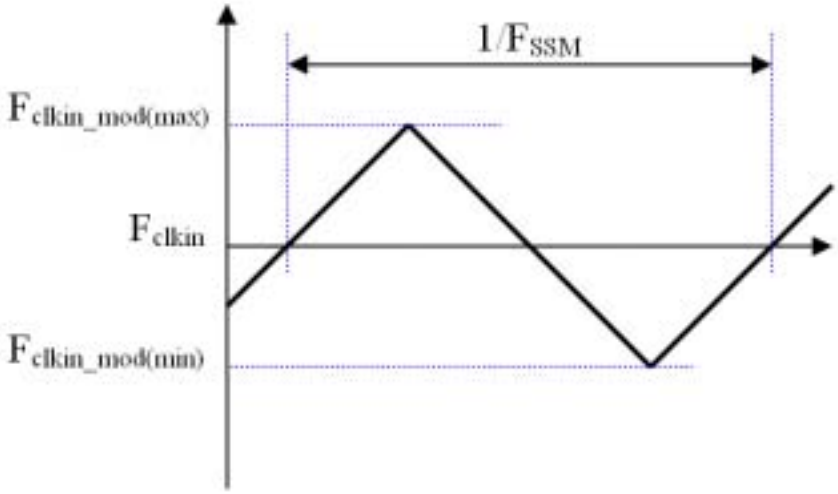

Note (3) The LVDS timing diagram and setup/hold time is defined and showing as the following figures.

LVDS RECEIVER INTERFACE TIMING DIAGRAM

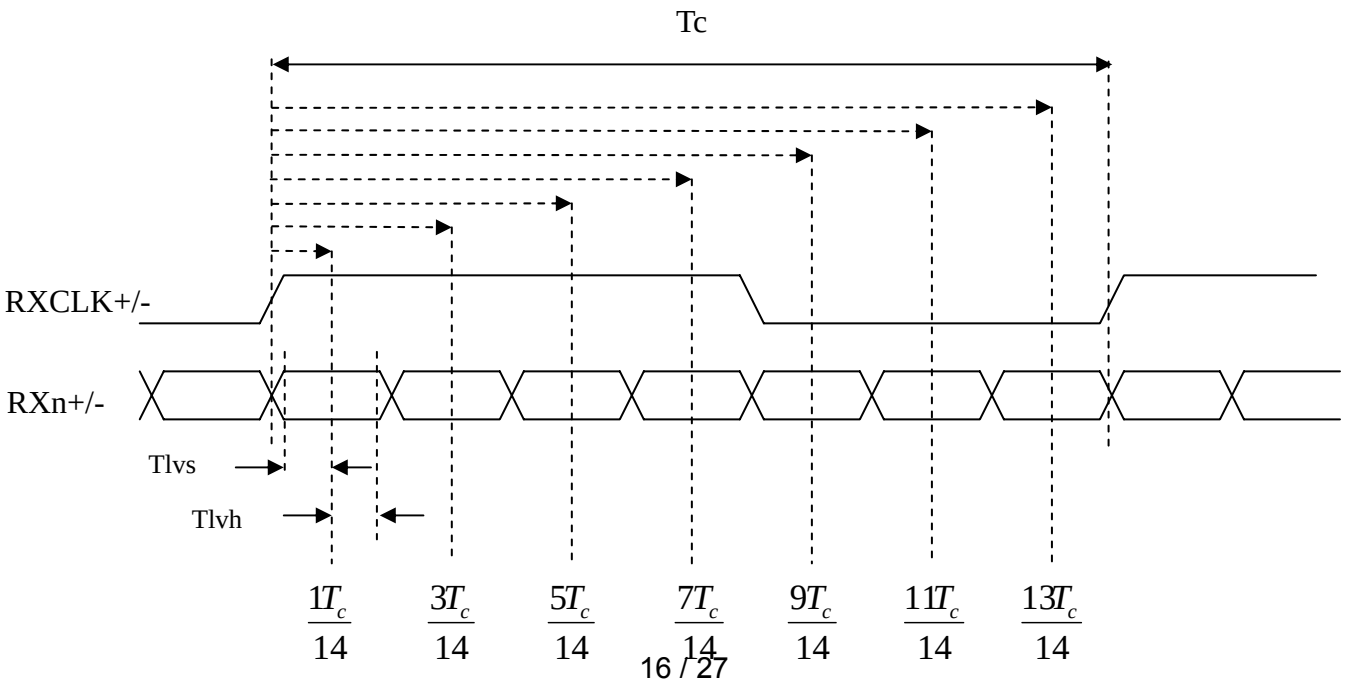

6.2 POWER ON/OFF SEQUENCE

To prevent a latch-up or DC operation of LCD module, the power on/off sequence should be as the diagram below.

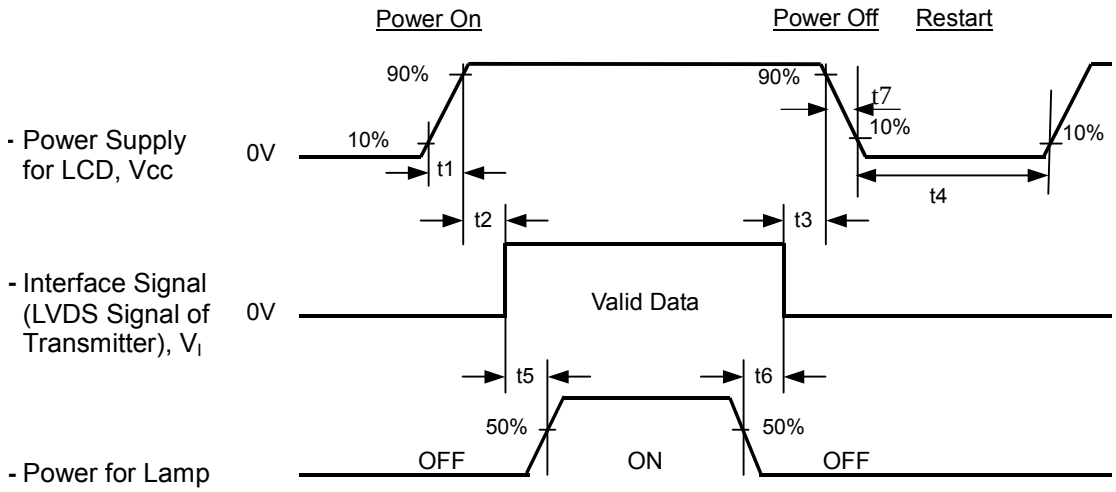

Timing Specifications:

0.5< t1 ≦ 10 msec

0 < t2 ≦ 50 msec

0 < t3 ≦ 50 msec

t4 ≧ 500 msec

t5 ≧ 450 msec

t6 ≧ 90 msec

5 ≦t7 ≦ 100 msec

Note.

(1) The supply voltage of the external system for the module input should be the same as the definition of Vcc.

(2) Apply the lamp voltage within the LCD operation range. When the backlight turns on before the LCD operation of the LCD turns off before the backlight turns off, the display may momentarily become abnormal screen.

(3) In case of VCC = off level, please keep the level of input signals on the low or keep a high impedance.

(4) T4 should be measured after the module has been fully discharged between power off and on period.

(5) Interface signal shall not be kept at high impedance when the power is on.

(6) CMO won't take any responsibility for the products which are damaged by the customers not following the Power Sequence.

(7) There might be slight electronic noise when LCD is turned off (even backlight unit is also off). To avoid this symptom, we suggest "Vcc falling timing" to follow "t7 spec".

7. OPTICAL CHARACTERISTICS

7.1 TEST CONDITIONS

Item	Symbol	Value	Unit
Ambient Temperature	Ta	25±2	°C
Ambient Humidity	Ha	50±10	%RH
Supply Voltage	V_{CC}	5.0	V
Input Signal	According to typical value in "3. ELECTRICAL CHARACTERISTICS"		
Lamp Current	I_L	7.5	mA
Inverter Operating Frequency	F_L	55	KHz
Inverter	Darfon VK.13165.101		

7.2 OPTICAL SPECIFICATIONS

The relative measurement methods of optical characteristics are shown in 7.2. The following items should be measured under the test conditions described in 7.1 and stable environment shown in Note (5).

Item		Symbol	Condition	Min.	Typ.	Max.	Unit	Note
Color Chromaticity (CIE 1931)	Red	Rx	θ_x=0°, θ_Y =0° CS-1000T	Typ - 0.03	0.647	Typ + 0.03	-	(1), (5)
		Ry			0.334			
	Green	Gx			0.284			
		Gy			0.607			
	Blue	Bx			0.151			
		By			0.071			
	White	Wx			0.313			
		Wy			0.329			
Center Luminance of White (Center of Screen)		L_C		250	300		cd/m^2	(4), (5)
Contrast Ratio		CR		800	1200		-	(2), (5)
Response Time		T_R	θ_x=0°, θ_Y =0°	---	0.8	2.5	ms	(3)
		T_F		---	2.6	5.5		
White Variation		δW	θ_x=0°, θ_Y =0° CA-210	---	---	1.33	-	(5), (6)
Viewing Angle	Horizontal	θ_x+	CR≧5	80	89		Deg.	(1), (5)
		θ_x-		80	89	---		
	Vertical	θ_Y+		75	85	---		
		θ_Y-		75	85	---		
Viewing Angle	Horizontal	θ_x+	CR ≧ 10 CA-210	75	85	---	Deg.	(1), (5)
		θ_x-		75	85	---		
	Vertical	θ_Y+		70	80	---		
		θ_Y-		70	80	---		

Note (1) Definition of Viewing Angle (θx, θy):

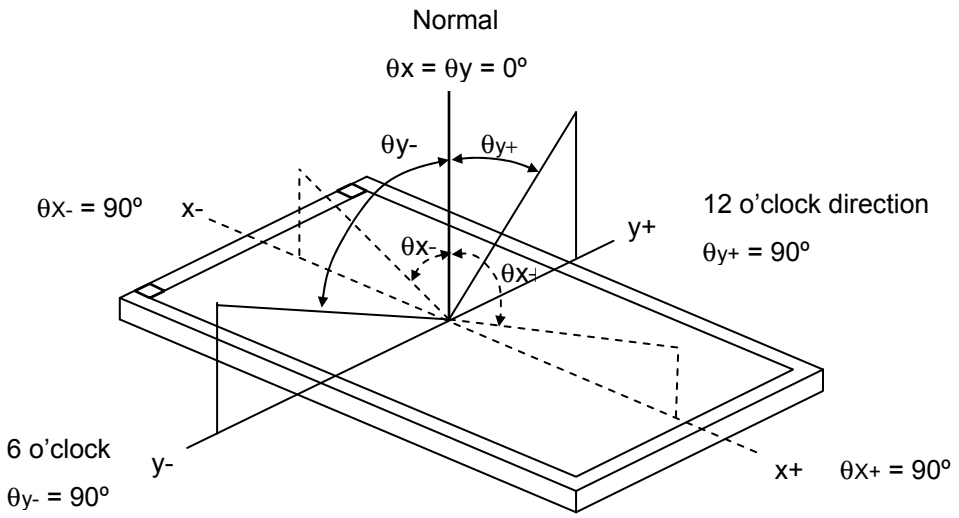

Note (2) Definition of Contrast Ratio (CR):

The contrast ratio can be calculated by the following expression.

Contrast Ratio (CR) = L255 / L0

L255: Luminance of gray level 255

L 0: Luminance of gray level 0

CR = CR (1)

CR (X) is corresponding to the Contrast Ratio of the point X at Figure in Note (6).

Note (3) Definition of Response Time (T_R, T_F):

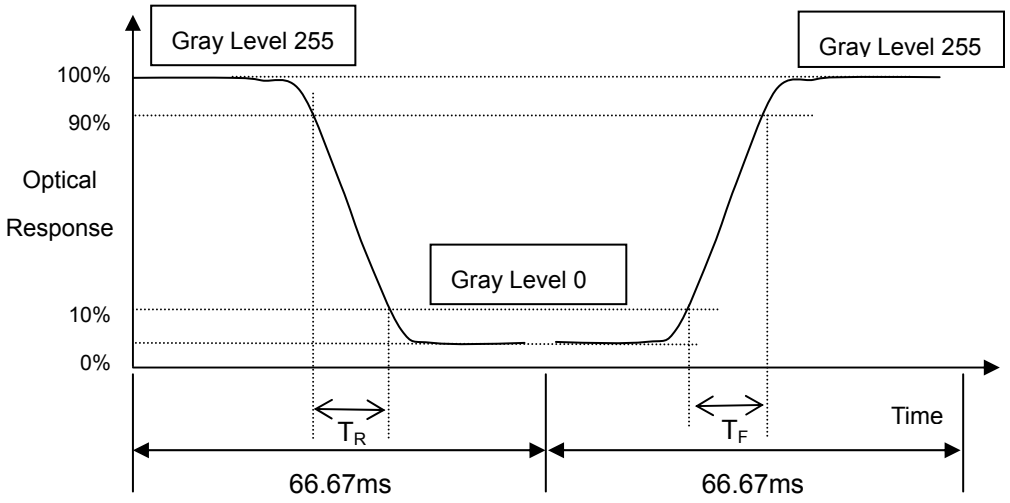

Note (4) Definition of Luminance of White (L_C):

Measure the luminance of gray level 255 at center point

L_C = L (1)

L (x) is corresponding to the luminance of the point X at Figure in Note (6).

Note (5) Measurement Setup:

The LCD module should be stabilized at given temperature for 40 minutes to avoid abrupt temperature change during measuring. In order to stabilize the luminance, the measurement should be executed after lighting Backlight for 40 minutes in a windless room.

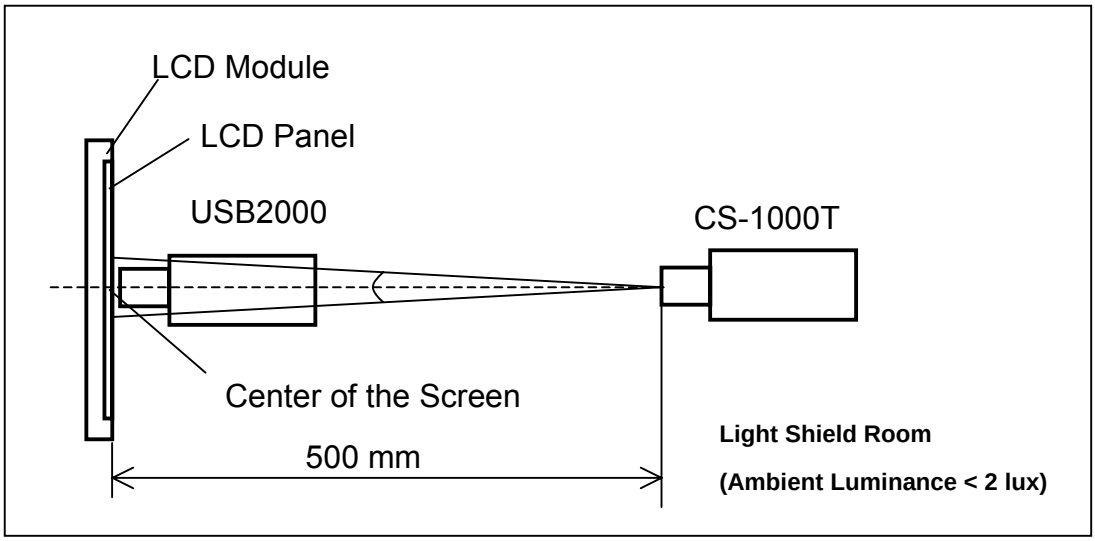

Note (6) Definition of White Variation (δW):

Measure the luminance of gray level 255 at 9 points

δW = Maximum [L (1), L (2) ……L (4), L (9)] / Minimum [L (1), L (2) …… L (4), L (9)]

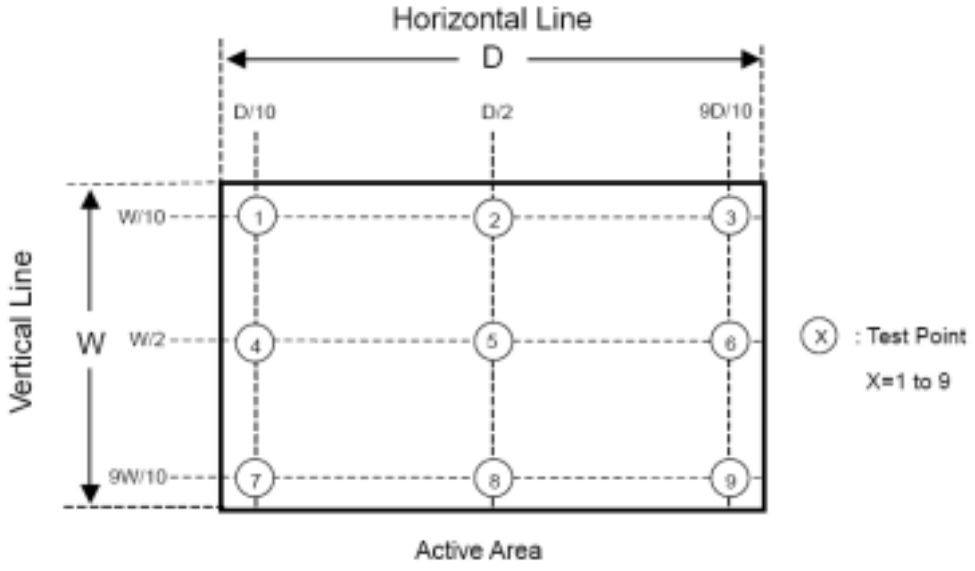

8. PACKAGING

8.1 PACKING SPECIFICATIONS

(1) 6 LCD modules / 1 Box

(2) Box dimensions: 720(L) X 360(W) X 480(H) mm

(3) Weight: approximately: 22.83kg (6 modules per box)

8.2 PACKING METHOD

(1) Carton Packing should have no failure in the following reliability test items.

Test Item	Test Conditions	Note
Vibration	ISTA STANDARD Random, Frequency Range: 1 – 200 Hz Top & Bottom: 30 minutes (+Z), 10 min (-Z), Right & Left: 10 minutes (X) Back & Forth 10 minutes (Y)	Non Operation
Dropping Test	1 Angle, 3 Edge, 6 Face, 45.7cm	Non Operation

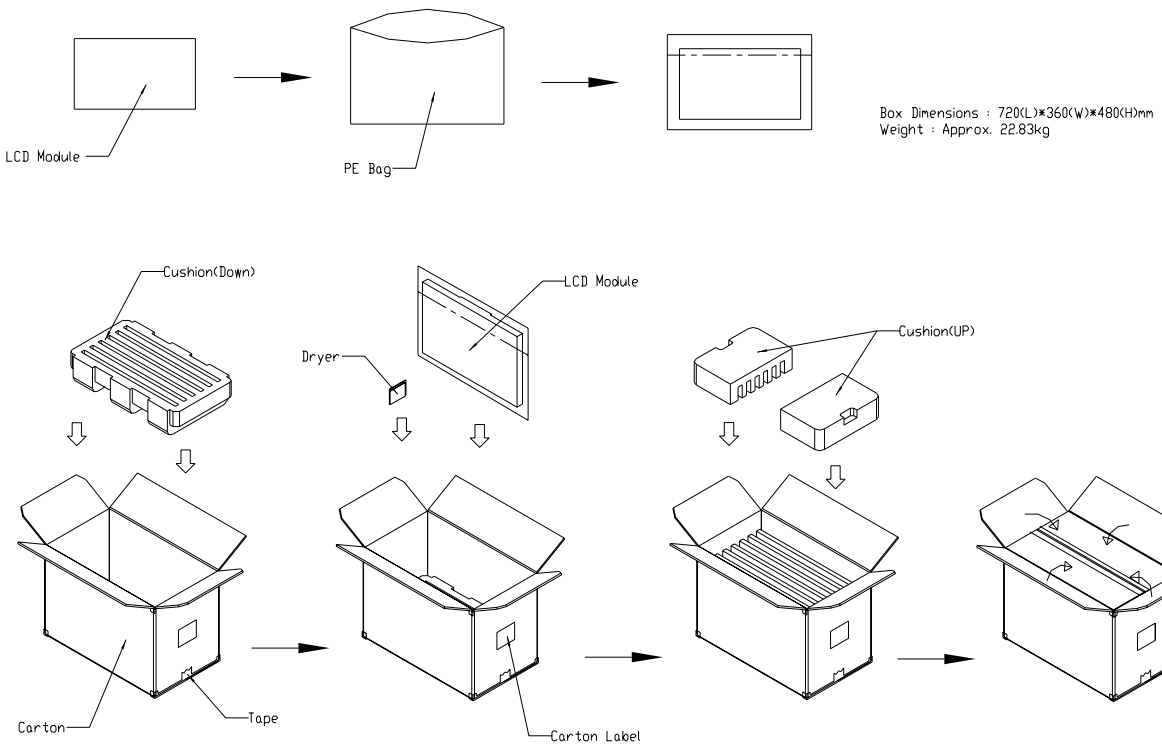

Figure. 8-1 Packing method

For ocean shipping

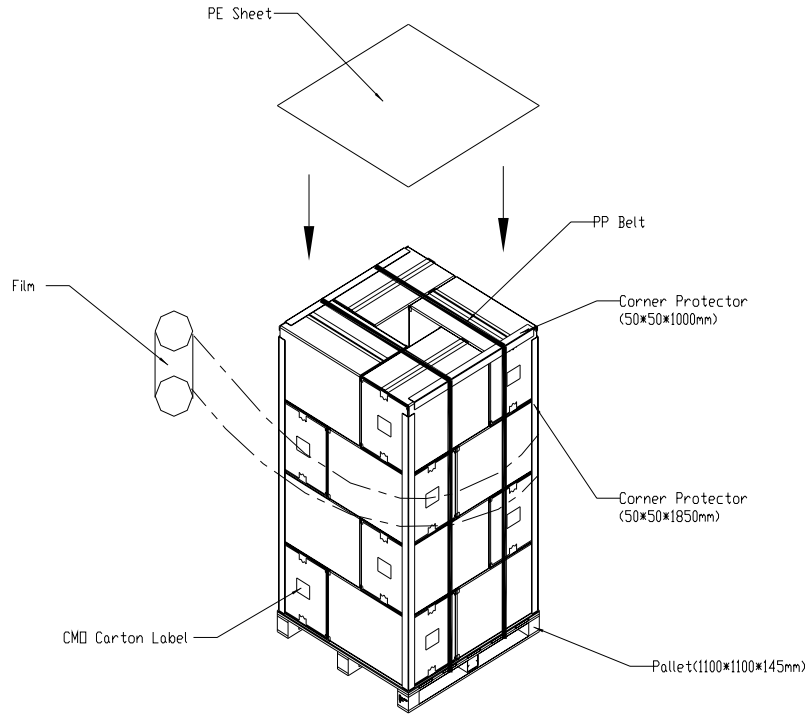

Figure. 8-2 Packing method

For air transport

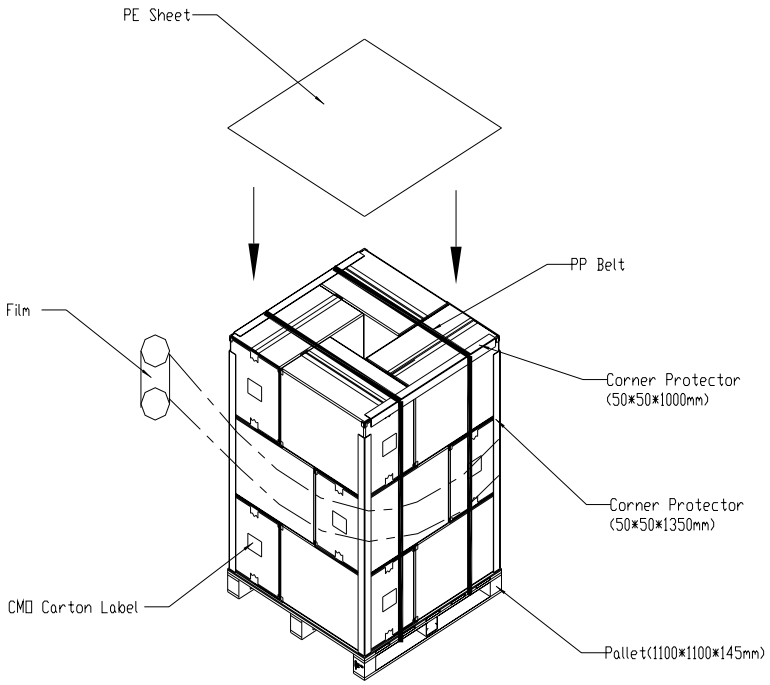

Figure. 8-3 Packing method

9. DEFINITION OF LABELS

9.1 CMO MODULE LABEL

The barcode nameplate is pasted on each module as illustration, and its definitions are as following explanation.

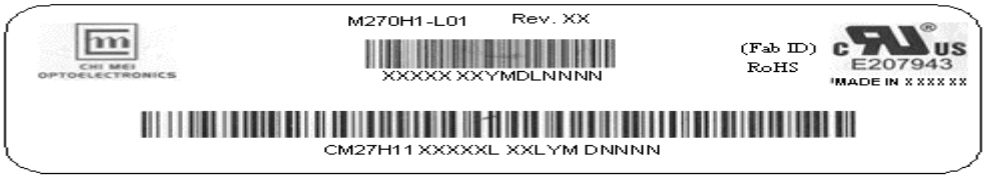

(a) Model Name: M270H1-L01

(b) Revision: Rev. XX, for example: A0, A1… B1, B2… or C1, C2…etc.

(c) CMO barcode definition:

Serial ID: XX-XX-X-XX-YMD-L-NNNN

Code	Meaning	Description
XX	CMO internal use	-
XX	Revision	Cover all the change
X	CMO internal use	-
YMD	Year, month, day	Year: 2001=1, 2002=2, 2003=3, 2004=4… Month: 1~12=1, 2, 3, ~, 9, A, B, C Day: 1~31=1, 2, 3, ~, 9, A, B, C, ~, W, X, Y, exclude I, O, and U.
L	Product line #	Line 1=1, Line 2=2, Line 3=3, …
NNNN	Serial number	Manufacturing sequence of product

(d) Customer's barcode definition:

Serial ID: CM-27H11-X-X-X-XX-L-XX-L-YMD-NNNN

Code	Meaning	Description
CM	Supplier code	CMO=CM
27H11	Model number	M270H1-L01= 27H11
X	Revision code	Non ZBD: 1,2,~,8,9 / ZBD: A~Z
X	Source driver IC code	Century=1, CLL=2, Demos=3, Epson=4, Fujitsu=5, Himax=6, Hitachi=7, Hynix=8, LDI=9, Matsushita=A, NEC=B, Novatec=C, OKI=D, Philips=E, Renasas=F, Samsung=G, Sanyo=H, Sharp=I, TI=J, Topro=K, Toshiba=L, Windbond=M
X	Gate driver IC code	
XX	Cell location	Tainan Taiwan=TN, Ningbo China=NP
L	Cell line #	1,2,~,9,A,B,~,Y,Z
XX	Module location	Tainan Taiwan=TN, Ningbo China=NP
L	Module line #	1,2,~,9,A,B,~,Y,Z
YMD	Year, month, day	Year: 2001=1, 2002=2, 2003=3, 2004=4… Month: 1~12=1, 2, 3, ~, 9, A, B, C Day: 1~31=1, 2, 3, ~, 9, A, B, C, ~, T, U, V
NNNN	Serial number	By LCD supplier

(e) FAB ID(UL Factory ID):

Region	Factory ID
TWCMO	GEMN
NBCMO	LEOO
NBCME	CANO
NHCMO	CAPG

10. Reliability Test

Environment test conditions are listed as following table.

Items	Required Condition	Note
Temperature Humidity Bias (THB)	Ta= 50℃ , 80%RH, 240hours	
High Temperature Operation (HTO)	Ta= 50℃ , 50%RH , 240hours	
Low Temperature Operation (LTO)	Ta= 0℃ , 240hours	
High Temperature Storage (HTS)	Ta= 60℃ , 240hours	
Low Temperature Storage (LTS)	Ta= -20℃ , 240hours	
Vibration Test (Non-operation)	Acceleration: 1.5 Grms Wave: Half-sine Frequency: 10 - 300 Hz Sweep: 30 Minutes each Axis (X, Y, Z)	
Shock Test (Non-operation)	Acceleration: 50 G Wave: Half-sine Active Time: 11 ms Direction : ± X, ± Y, ± Z.(one time for each Axis)	
Thermal Shock Test (TST)	-20℃/30min , 60℃ / 30min , 100 cycles	
On/Off Test	25℃ ,On/10sec , Off /10sec , 30,000 cycles	
ESD (Electro Static Discharge)	Contact Discharge: ± 8KV, 150pF(330Ω)	
	Air Discharge: ± 15KV, 150pF(330Ω)	
Altitude Test	Operation:10,000 ft / 24hours Non-Operation:30,000 ft / 24hours	

11. PRECAUTIONS

11.1 ASSEMBLY AND HANDLING PRECAUTIONS

(1) Do not apply rough force such as bending or twisting to the module during assembly.

(2) To assemble or install module into user's system can be only in clean working areas. The dust and oil may cause electrical short or worsen the polarizer.

(3) It's not permitted to have pressure or impulse on the module because the LCD panel and Backlight will be damaged.

(4) Always follow the correct power sequence when LCD module is connecting and operating. This can prevent damage to the CMOS LSI chips during latch-up.

(5) Do not pull the I/F connector in or out while the module is operating.

(6) Do not disassemble the module.

(7) Use a soft dry cloth without chemicals for cleaning, because the surface of polarizer is very soft and easily scratched.

(8) It is dangerous that moisture come into or contacted the LCD module, because moisture may damage LCD module when it is operating.

(9) High temperature or humidity may reduce the performance of module. Please store LCD module within the specified storage conditions.

(10) When ambient temperature is lower than 10ºC may reduce the display quality. For example, the

response time will become slowly, and the starting voltage of CCFL will be higher than room temperature.

11.2 SAFETY PRECAUTIONS

(1) The startup voltage of Backlight is approximately 1000 Volts. It may cause electrical shock while assembling with inverter. Do not disassemble the module or insert anything into the Backlight unit.

(2) If the liquid crystal material leaks from the panel, it should be kept away from the eyes or mouth. In case of contact with hands, skin or clothes, it has to be washed away thoroughly with soap.

(3) After the module's end of life, it is not harmful in case of normal operation and storage.

11.3 SAFETY STANDARDS

The LCD module should be certified with safety regulations as follows:

(1) UL60950-1 or updated standard.

(2) IEC60950-1 or updated standard.

11.4. Storage

(1) Do not leave the module in high temperature, and high humidity for a long time.
It is highly recommended to store the module with temperature from 0℃ to 35℃
And relative humidity of less than 70%

(2) Do not store the TFT – LCD module in direct sunlight

(3) The module should be stored in dark place. It is prohibited to apply sunlight or fluorescent light in storing

11.5. Operation condition guide

(1) The LCD product should be operated under normal condition.
Normal condition is defined as below :
Temperature : 20±15℃
Humidity: 65±20%
Display pattern : continually changing pattern(Not stationary)

(2) If the product will be used in extreme conditions such as high temperature , high humidity , high altitude , display pattern or operation time etc…It is strongly recommended to contact CMO for application engineering advice . Otherwise , Its reliability and function may not be guaranteed.

11.6 OTHER

When fixed patterns are displayed for a long time, remnant image is likely to occur.

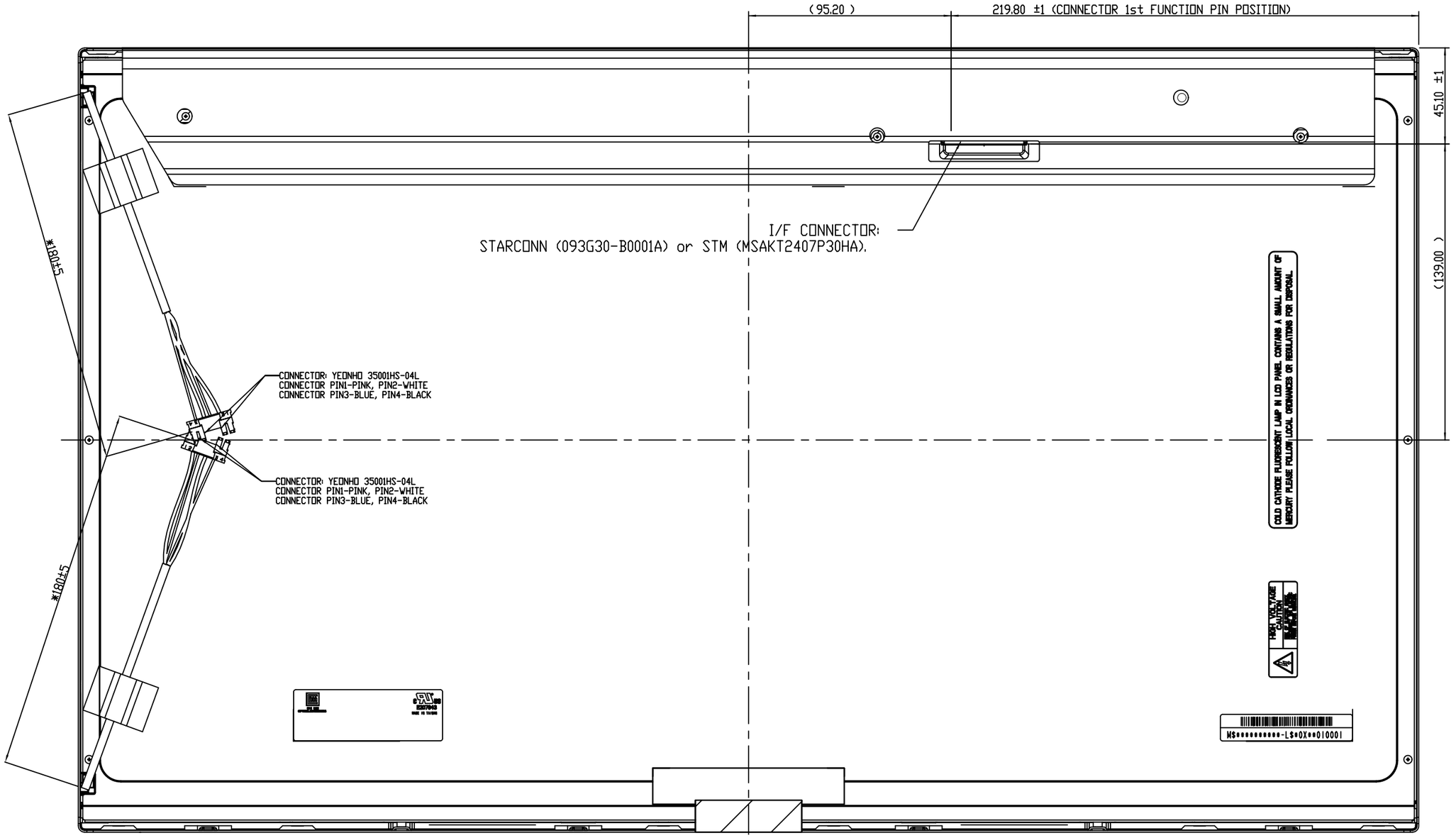

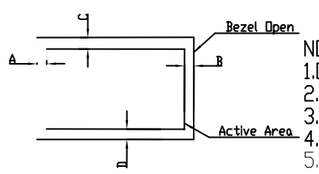

NOTE:
1.OUTLINE TOLERANCE: ±0.5mm.
2.I/F CONNECTOR SPEC.: STARCONN (093G30-B0001A) or STM (MSAKT2407P30HA).
3.LAMP CONNECTOR: YEONHO 35001HS-02L.
4.SIDE MOUNT HOLE ROTATIONAL TORQUE MUST BE MAX. 5kgf-cm.
5. Display area position tolerance: |A-B|<=1mm & |C-D|<=1mm.

Mark	Description	Date	Changed By	Approved By	ECN No.	Remark

TITLE	ASSY_MODULE_M270HJ_L01(903)			2D REV.A 3D REV.1.19	
Approved	YULE_LIN	Drawing No.	M27014103A		
Checked	ALAN_LEE	Part No.	TBD		
Drawer	AIDEN_WAN	Material	TBD	Sheet 2 / 2	A1
Designer	AIDEN_WAN	Date 2009-06-15	Scale 1/1	Unitmm	

CHI MEI OPTOELECTRONICS CORP.

ALL RIGHTS RESERVED, COPYING FORBIDDEN.

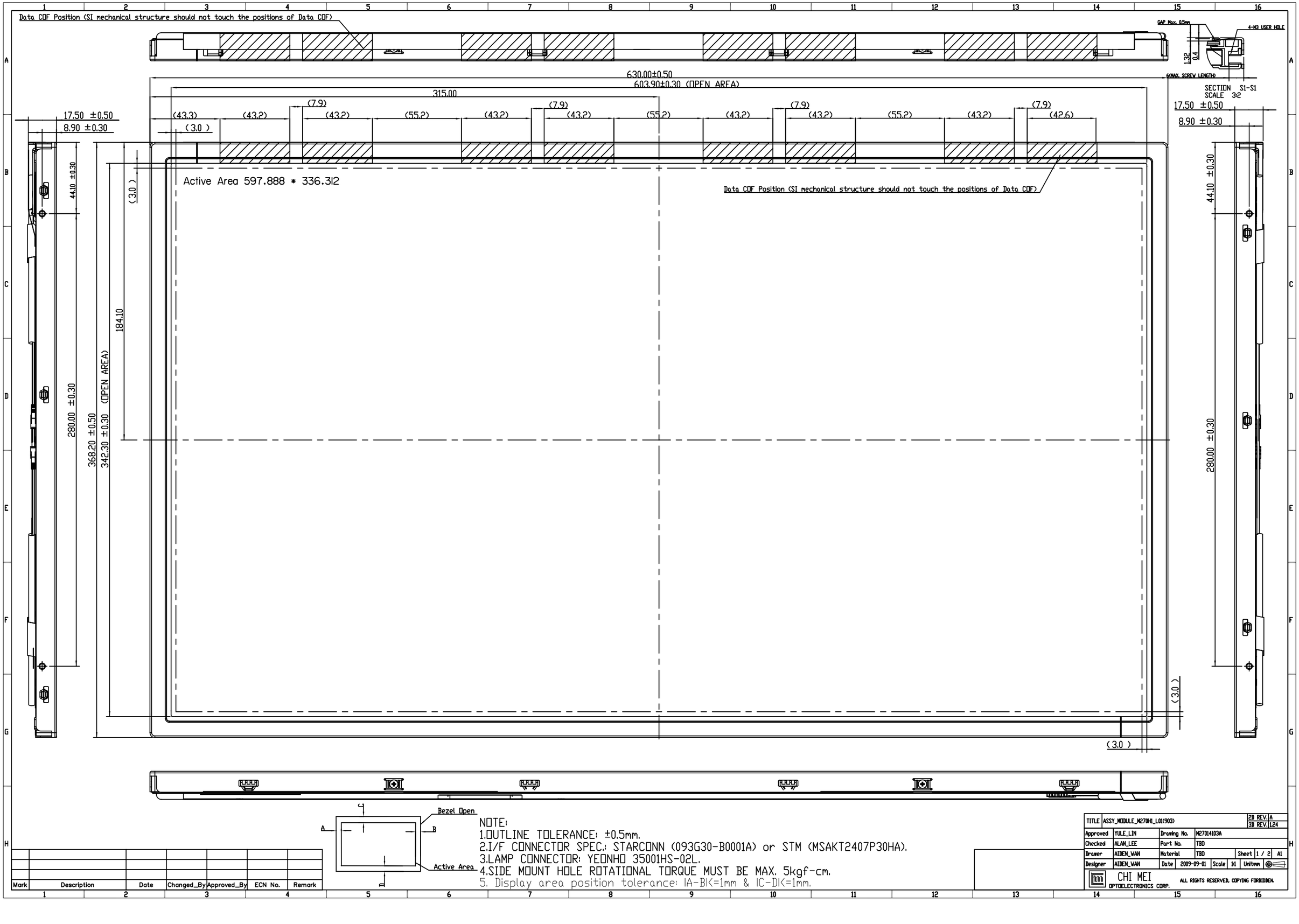

NOTE:
1. OUTLINE TOLERANCE: ±0.5mm.
2. I/F CONNECTOR SPEC.: STARCONN (093G30-B0001A) or STM (MSAKT2407P30HA).
3. LAMP CONNECTOR: YEONHO 35001HS-02L.
4. SIDE MOUNT HOLE ROTATIONAL TORQUE MUST BE MAX. 5kgf-cm.
5. Display area position tolerance: |A-B|<=1mm & |C-D|<=1mm.

Mark	Description	Date	Changed_By	Approved_By	ECN No.	Remark

TITLE	ASSY_MODULE_M270H1_L01(903)			2D REV.A 3D REV.1.24	
Approved	YULE_LIN	Drawing No.	M27014103A		
Checked	ALAN_LEE	Part No.	TBD		
Drawer	AIDEN_WAN	Material	TBD	Sheet	1 / 2 A1
Designer	AIDEN_WAN	Date	2009-09-01	Scale	1/1 Unitmm

CHI MEI OPTOELECTRONICS CORP.

ALL RIGHTS RESERVED, COPYING FORBIDDEN.